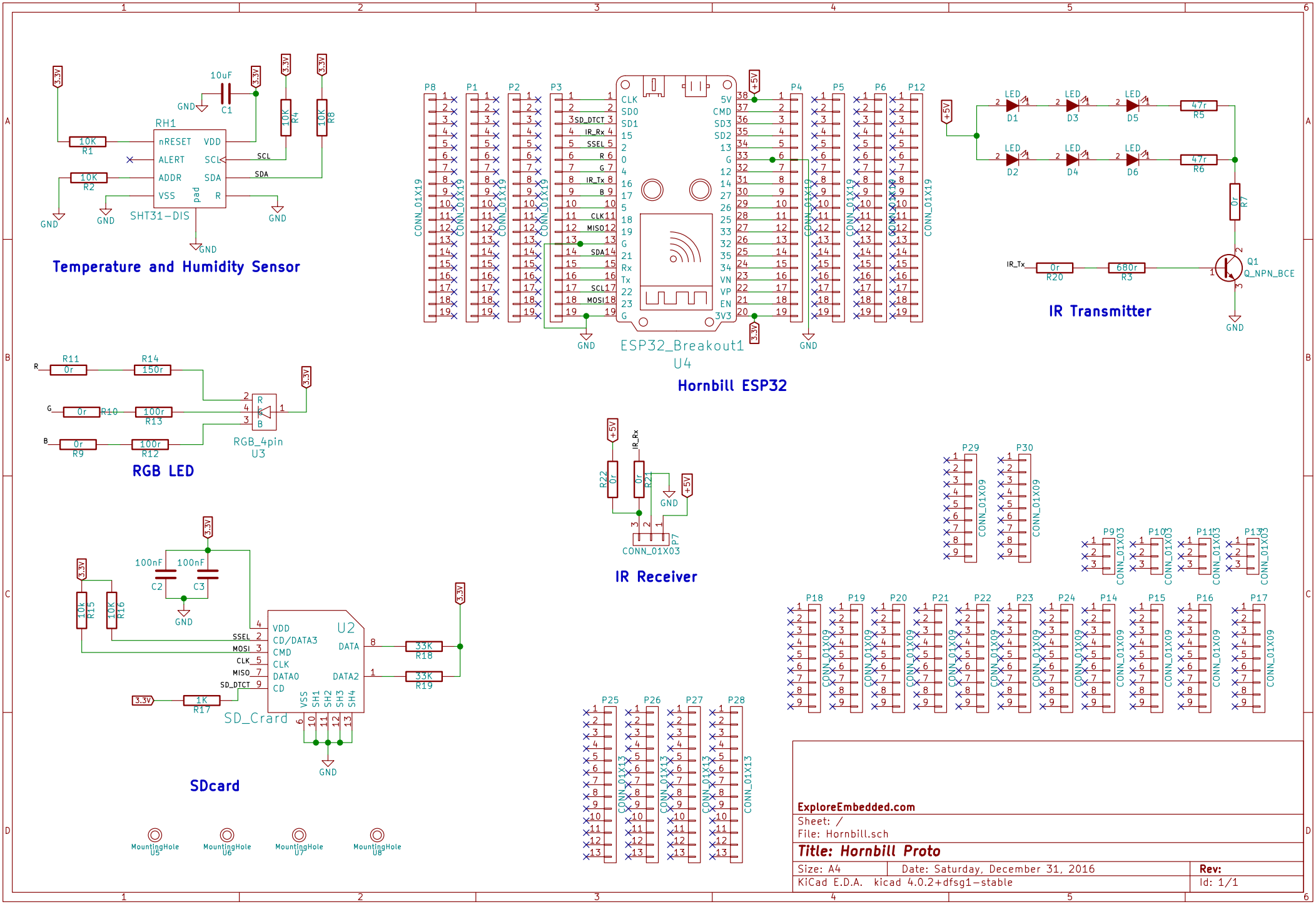
Temperature and Humidity Sensor
RH1
SHT31-DIS
nRESET
ALERT
ADDR
VSS
VDD
SCL
SDA
R
pad
10uF
C1
10K R1
10K R2
10K R4
10K R8
3.3V
GND
Hornbill ESP32
ESP32_Breakout1
U4
CONN_01X19
P8
P1
P2
P3
P4
P5
P6
P12
CLK
SD0
SD1
SD_DTCT
IR_Rx
SSEL
R
G
IR_Tx
B
CLK
MISO
SDA
SCL
MOSI
5V
CMD
SD3
SD2
G
VN
VP
EN
3V3
+5V
IR Transmitter
LED
D1
D2
D3
D4
D5
D6
47r R5
47r R6
0r R7
IR_Tx
0r R20
680r R3
Q1
Q_NPN_BCE
RGB LED
R11 0r
R14 150r
G 0r R10
100r R13
B 0r R9
100r R12
RGB_4pin
U3
IR Receiver
R22 0r
R21 0r
IR_Rx
P7
CONN_01X03
P29
P30
CONN_01X09
P9
P10
P11
P13
P18
P19
P20
P21
P22
P23
P24
P14
P15
P16
P17
P25
P26
P27
P28
CONN_01X13
SDcard
U2
VDD
CD/DATA3
CMD
CLK
DATA0
CD
DATA
DATA2
VSS
SH1
SH2
SH3
SH4
100nF C2
100nF C3
10k R15
10K R16
33K R18
33K R19
1K R17
MountingHole
U5
U6
U7
U8
ExploreEmbedded.com
Sheet: /
File: Hornbill.sch
Title: Hornbill Proto
Size: A4
Date: Saturday, December 31, 2016
Rev:
KiCad E.D.A. kicad 4.0.2+dfsg1-stable
Id: 1/1